KM29

Grooved Nuts

Details:

Main dimensions			
Weight [kg]	≈ 1.8	B [mm]	24
G [mm]	M145x 2	b [mm]	14
		h [mm]	6
d_1 [mm]	171		
d_2 [mm]	190		

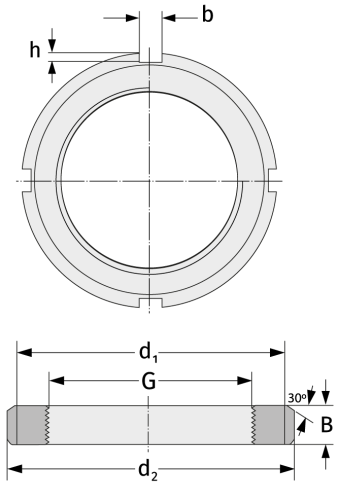

Mating dimensions	

Containing components	
Securing	MB29