N1030M3

Cylindrical Roller Bearings (single row, with cage)

Details:

Main dimensions			
d [mm]	150	d_1 [mm]	≈ 176.7
D [mm]	225	$r_{1,2}$ [mm]	2.1
B [mm]	35	$r_{3,4}$ [mm]	1.5
Weight [kg]	≈ 4	s [mm]	5
E [mm]	205.5		

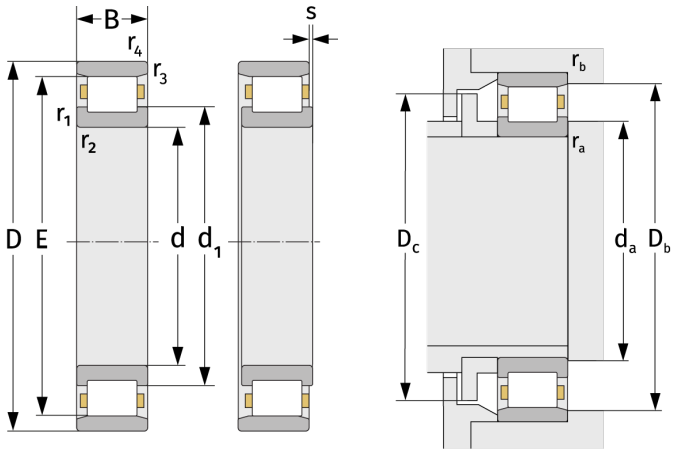

Mating dimensions		Calculation data	
$d_{a,\,min}$ [mm]	160.2	C [kN]	199
$D_{b,\,min}$ [mm]	208	C_0 [kN]	286
$D_{c,\,max}$ [mm]	202	C_u [kN]	32.5
$r_{a,\,max}$ [mm]	2.1	n_{th} [min^{-1}]	3129
$r_{b,\,max}$ [mm]	1.5	n_g [min^{-1}]	3800