N1868M3

Cylindrical Roller Bearings (single row, with cage)

Details:

Main dimensions			
d [mm]	340	d_1 [mm]	≈ 369.5
D [mm]	420	$r_{1,2}$ [mm]	2.1
B [mm]	38	$r_{3,4}$ [mm]	1.5
Weight [kg]	≈ 11	s [mm]	5.5
E [mm]	401.5		

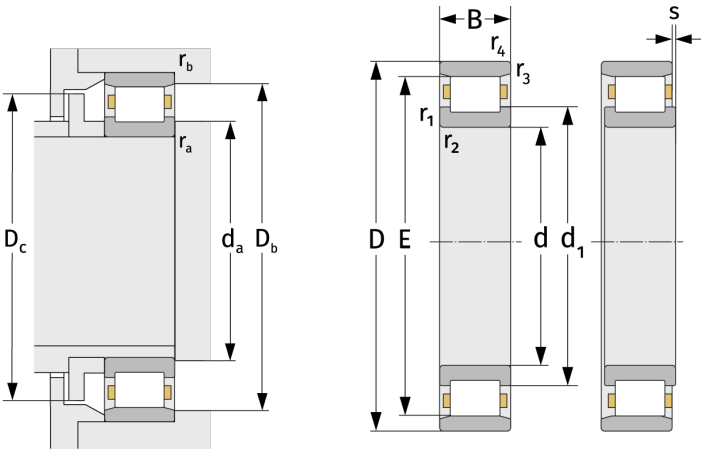

Mating dimensions		Calculation data	
$d_{a, min}$ [mm]	350.2	C [kN]	382
$D_{b, min}$ [mm]	405	C_0 [kN]	795
$D_{c, max}$ [mm]	398	C_u [kN]	73.5
$r_{a, max}$ [mm]	2.1	n_{th} [min^{-1}]	1194
$r_{b, max}$ [mm]	1.5	n_g [min^{-1}]	1800