N1984E.M3

Cylindrical Roller Bearings (single row, with cage)

Details:

Main dimensions			
d [mm]	420	d_1 [mm]	≈ 469.2
D [mm]	560	$r_{1,2}$ [mm]	4
B [mm]	65	$r_{3,4}$ [mm]	4
Weight [kg]	≈ 42	s [mm]	5.3
E [mm]	530		

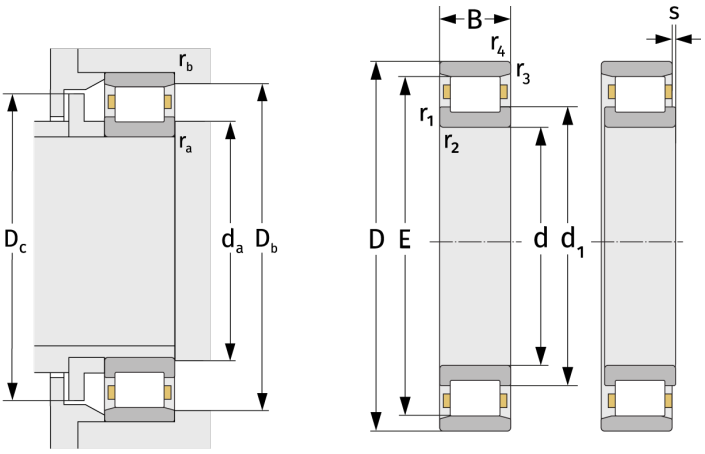

Mating dimensions		Calculation data	
$d_{a, min}$ [mm]	434.6	C [kN]	1030
$D_{b, min}$ [mm]	534	C_0 [kN]	1930
$D_{c, max}$ [mm]	526	C_u [kN]	166
$r_{a, max}$ [mm]	3	n_{th} [min^{-1}]	909
$r_{b, max}$ [mm]	3	n_g [min^{-1}]	1300