N1988E.M3

Cylindrical Roller Bearings (single row, with cage)

Details:

Main dimensions			
d [mm]	440	d_1 [mm]	≈ 496.8
D [mm]	600	$r_{1,2}$ [mm]	4
B [mm]	74	$r_{3,4}$ [mm]	4
Weight [kg]	≈ 59	s [mm]	5.9
E [mm]	564		

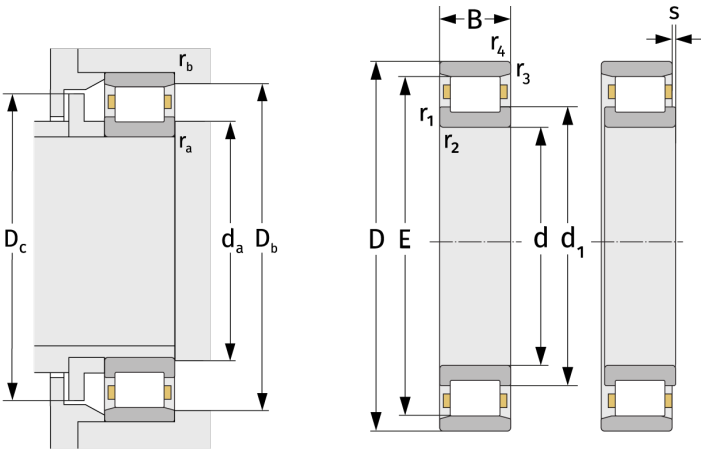

Mating dimensions		Calculation data	
$d_{a, min}$ [mm]	454.6	C [kN]	1200
$D_{b, min}$ [mm]	568	C_0 [kN]	2230
$D_{c, max}$ [mm]	560	C_u [kN]	189
$r_{a, max}$ [mm]	3	n_{th} [min^{-1}]	867
$r_{b, max}$ [mm]	3	n_g [min^{-1}]	1300