N20/530E.M3

Cylindrical Roller Bearings (single row, with cage)

Details:

Main dimensions			
d [mm]	530	d_1 [mm]	≈ 620
D [mm]	780	$r_{1,2}$ [mm]	6
B [mm]	145	$r_{3,4}$ [mm]	6
Weight [kg]	≈ 245	s [mm]	8
E [mm]	724		

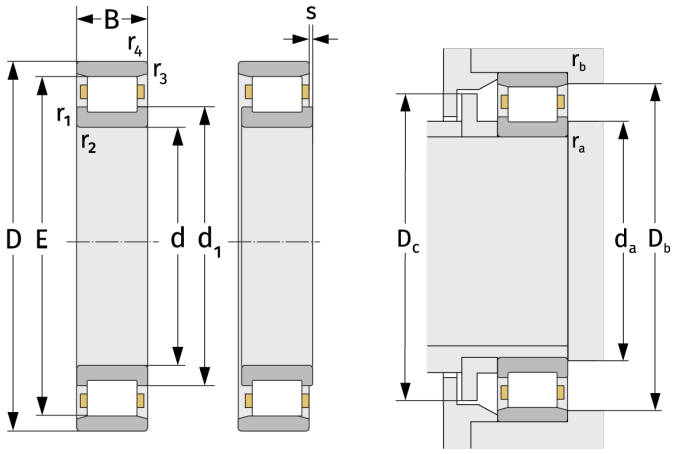

Mating dimensions		Calculation data	
$d_{a,\,min}$ [mm]	553	C [kN]	3520
$D_{b,\,min}$ [mm]	729	C_0 [kN]	7050
$D_{c,\,max}$ [mm]	719	C_u [kN]	559
$r_{a,\,max}$ [mm]	5	n_{th} [min^{-1}]	454
$r_{b,\,max}$ [mm]	5	n_g [min^{-1}]	920