N2028E.M3

Cylindrical Roller Bearings (single row, with cage)

Details:

Main dimensions			
d [mm]	140	d_1 [mm]	≈ 164.6
D [mm]	210	$r_{1,2}$ [mm]	2
B [mm]	42	$r_{3,4}$ [mm]	1.1
Weight [kg]	≈ 5	s [mm]	2.5
E [mm]	195		

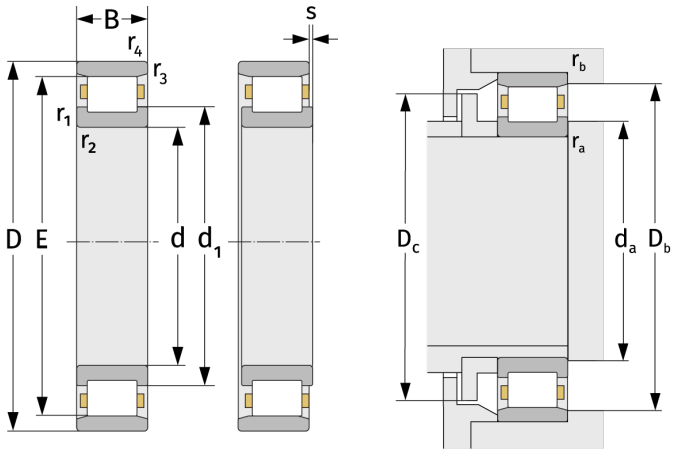

Mating dimensions		Calculation data	
$d_{a,\,min}$ [mm]	148.8	C [kN]	319
$D_{b,\,min}$ [mm]	197	C_0 [kN]	496
$D_{c,\,max}$ [mm]	193	C_u [kN]	57.5
$r_{a,\,max}$ [mm]	2	n_{th} [min^{-1}]	2890
$r_{b,\,max}$ [mm]	1	n_g [min^{-1}]	4100