N2038E.M3

Cylindrical Roller Bearings (single row, with cage)

Details:

Main dimensions			
d [mm]	190	d_1 [mm]	≈ 225.2
D [mm]	290	$r_{1,2}$ [mm]	2.1
B [mm]	60	$r_{3,4}$ [mm]	2.1
Weight [kg]	≈ 14	s [mm]	3.5
E [mm]	270		

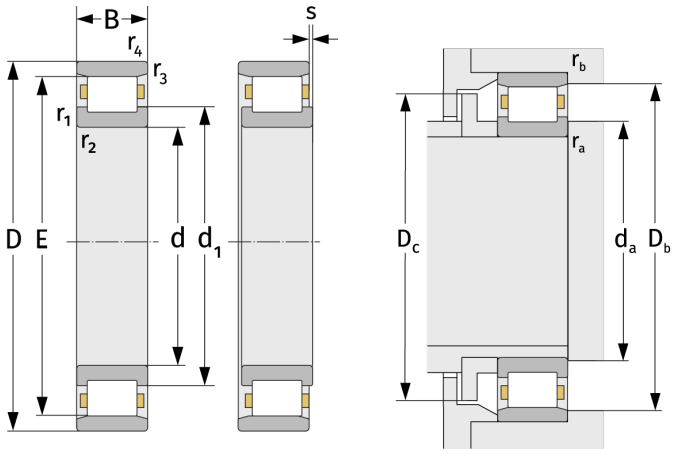

Mating dimensions		Calculation data	
$d_{a, min}$ [mm]	200.2	C [kN]	655
$D_{b, min}$ [mm]	273	C_0 [kN]	1060
$D_{c, max}$ [mm]	267	C_u [kN]	111
$r_{a, max}$ [mm]	2.1	n_{th} [min^{-1}]	1884
$r_{b, max}$ [mm]	2.1	n_g [min^{-1}]	2900