N2218E.M3

Cylindrical Roller Bearings (single row, with cage)

Details:

Main dimensions			
d [mm]	90	d_1 [mm]	≈ 114.6
D [mm]	160	$r_{1,2}$ [mm]	2
B [mm]	40	$r_{3,4}$ [mm]	2
Weight [kg]	≈ 3	s [mm]	3.5
E [mm]	145		

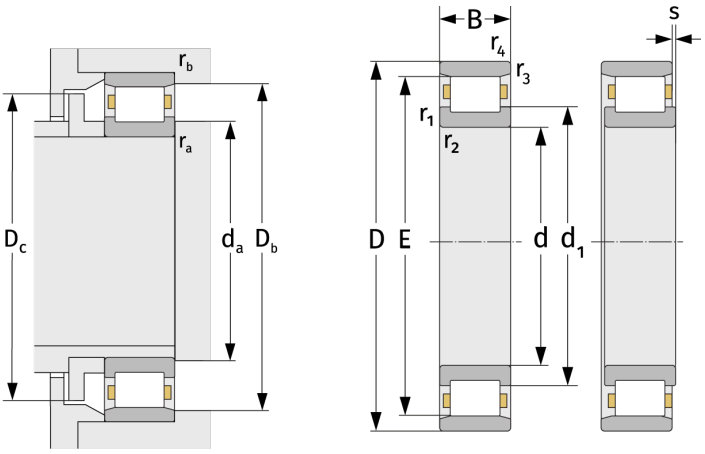

Mating dimensions		Calculation data	
$d_{a, min}$ [mm]	101	C [kN]	247
$D_{b, min}$ [mm]	147	C_0 [kN]	322
$D_{c, max}$ [mm]	143	C_u [kN]	40.9
$r_{a, max}$ [mm]	2	n_{th} [min^{-1}]	3251
$r_{b, max}$ [mm]	2	n_g [min^{-1}]	5800