N2256E.M3

Cylindrical Roller Bearings (single row, with cage)

Details:

Main dimensions			
d [mm]	280	d_1 [mm]	≈ 357
D [mm]	500	$r_{1,2}$ [mm]	5
B [mm]	130	$r_{3,4}$ [mm]	5
Weight [kg]	≈ 114	s [mm]	7.2
E [mm]	453		

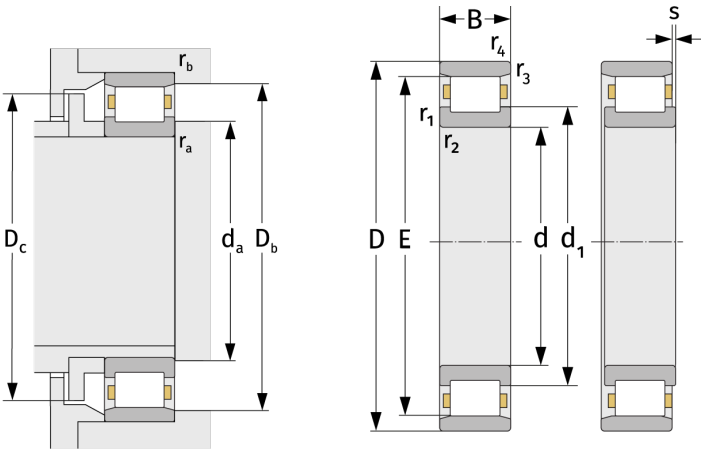

Mating dimensions		Calculation data	
$d_{a, min}$ [mm]	300	C [kN]	2320
$D_{b, min}$ [mm]	456	C_0 [kN]	3690
$D_{c, max}$ [mm]	450	C_u [kN]	339
$r_{a, max}$ [mm]	4	n_{th} [min^{-1}]	717
$r_{b, max}$ [mm]	4	n_g [min^{-1}]	1700