N28/600M4AM3

Cylindrical Roller Bearings (single row, with cage)

Details:

Main dimensions			
d [mm]	600	d_1 [mm]	≈ 649
D [mm]	730	$r_{1,2}$ [mm]	3
B [mm]	78	$r_{3,4}$ [mm]	3
Weight [kg]	≈ 68	s [mm]	9
E [mm]	697		

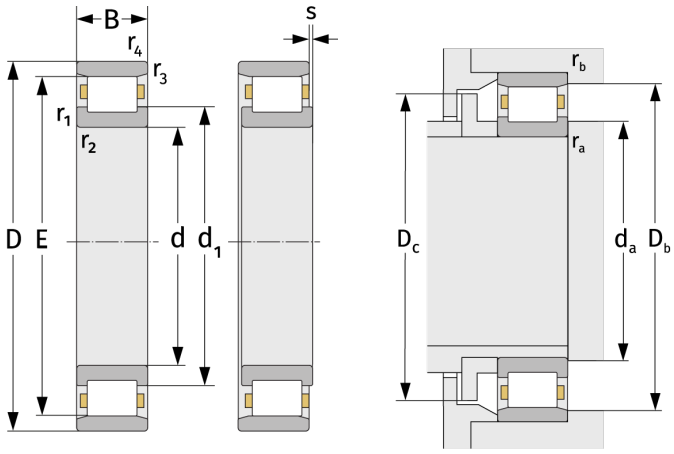

Mating dimensions		Calculation data	
$d_{a,\,min}$ [mm]	612.4	C [kN]	1260
$D_{b,\,min}$ [mm]	702	C_0 [kN]	3310
$D_{c,\,max}$ [mm]	692	C_u [kN]	262
$r_{a,\,max}$ [mm]	2.5	n_{th} [min^{-1}]	502
$r_{b,\,max}$ [mm]	2.5	n_g [min^{-1}]	900