N2815M3

Cylindrical Roller Bearings (single row, with cage)

Details:

Main dimensions			
d [mm]	75	d_1 [mm]	≈ 82
D [mm]	95	$r_{1,2}$ [mm]	0.6
B [mm]	13	$r_{3,4}$ [mm]	0.3
E [mm]	90	s [mm]	1.5

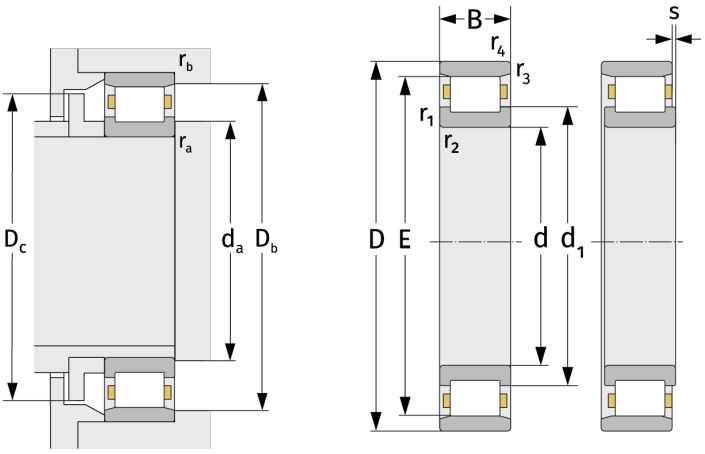

Mating dimensions		Calculation data	
$d_{a, min}$ [mm]	78.2	C [kN]	31.1
$D_{b, min}$ [mm]	91	C_0 [kN]	50.7
$D_{c, max}$ [mm]	88	C_u [kN]	6.66
$r_{a, max}$ [mm]	0.6	n_{th} [min^{-1}]	4445
$r_{b, max}$ [mm]	0.3	n_g [min^{-1}]	8600