N2836M3

Cylindrical Roller Bearings (single row, with cage)

Details:

Main dimensions			
d [mm]	180	d_1 [mm]	≈ 196.4
D [mm]	225	$r_{1,2}$ [mm]	1.1
B [mm]	27	$r_{3,4}$ [mm]	0.6
Weight [kg]	≈ 2	s [mm]	3.6
E [mm]	214		

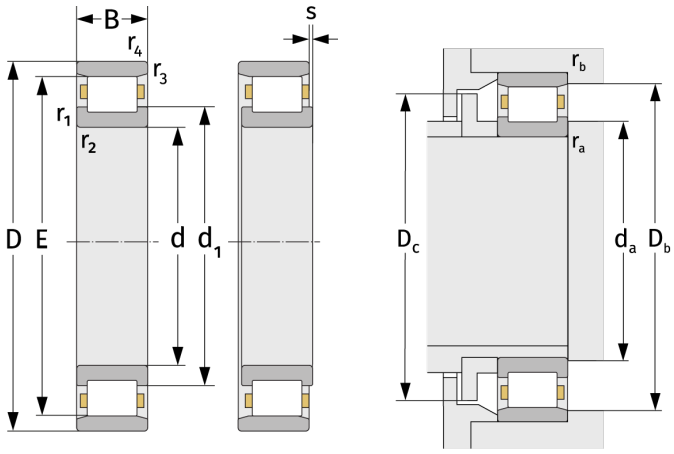

Mating dimensions		Calculation data	
$d_{a,\,min}$ [mm]	186	C [kN]	175
$D_{b,\,min}$ [mm]	216	C_0 [kN]	358
$D_{c,\,max}$ [mm]	212	C_u [kN]	39.8
$r_{a,\,max}$ [mm]	1	n_{th} [min^{-1}]	2091
$r_{b,\,max}$ [mm]	0.6	n_g [min^{-1}]	3500