N2956E.M3

Cylindrical Roller Bearings (single row, with cage)

Details:

Main dimensions			
d [mm]	280	d_1 [mm]	≈ 316.4
D [mm]	380	$r_{1,2}$ [mm]	2.1
B [mm]	60	$r_{3,4}$ [mm]	1.5
Weight [kg]	≈ 19	s [mm]	3.9
E [mm]	358		

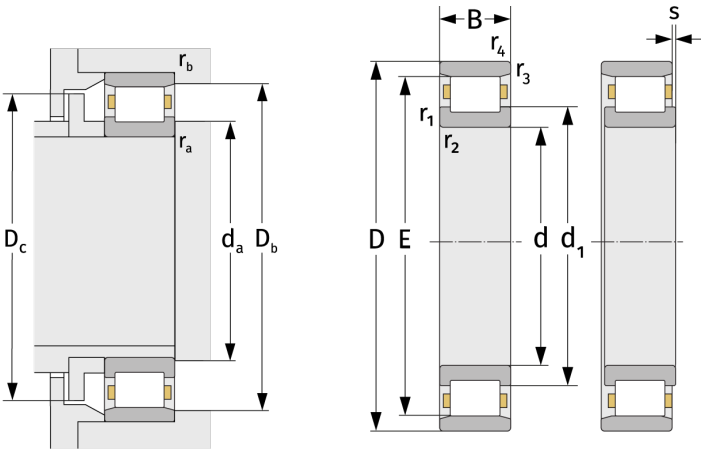

Mating dimensions		Calculation data	
$d_{a, min}$ [mm]	290.2	C [kN]	710
$D_{b, min}$ [mm]	361	C_0 [kN]	1380
$D_{c, max}$ [mm]	355	C_u [kN]	133
$r_{a, max}$ [mm]	2.1	n_{th} [min^{-1}]	1247
$r_{b, max}$ [mm]	1.5	n_g [min^{-1}]	2100