N3032M3

Cylindrical Roller Bearings (single row, with cage)

Details:

Main dimensions			
d [mm]	160	d_1 [mm]	≈ 188
D [mm]	240	$r_{1,2}$ [mm]	2.1
B [mm]	60	$r_{3,4}$ [mm]	1.5
Weight [kg]	≈ 9	s [mm]	6
E [mm]	220		

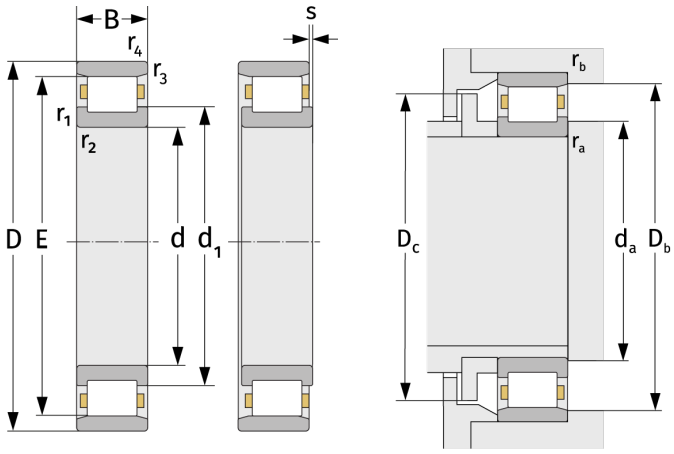

Mating dimensions		Calculation data	
$d_{a, min}$ [mm]	170.2	C [kN]	458
$D_{b, min}$ [mm]	223	C_0 [kN]	795
$D_{c, max}$ [mm]	217	C_u [kN]	88.8
$r_{a, max}$ [mm]	2.1	n_{th} [min^{-1}]	2349
$r_{b, max}$ [mm]	1.5	n_g [min^{-1}]	3600