N3930E.M3

Cylindrical Roller Bearings (single row, with cage)

Details:

Main dimensions			
d [mm]	150	d_1 [mm]	≈ 171.4
D [mm]	210	$r_{1,2}$ [mm]	2
B [mm]	45	$r_{3,4}$ [mm]	1.1
Weight [kg]	≈ 4	s [mm]	2.4
E [mm]	197		

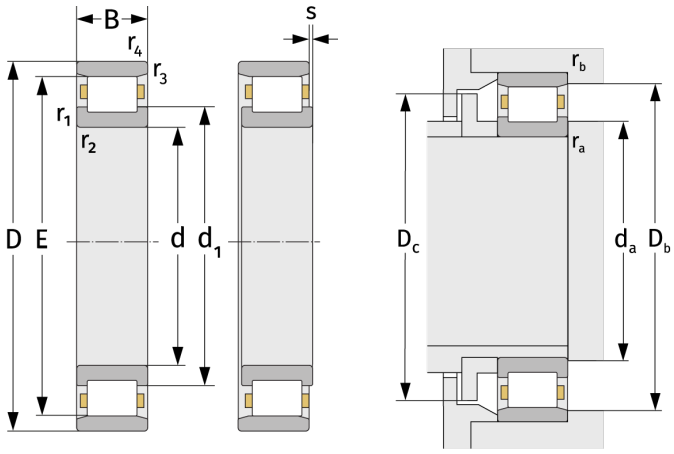

Mating dimensions		Calculation data	
$d_{a, min}$ [mm]	158.8	C [kN]	330
$D_{b, min}$ [mm]	200	C_0 [kN]	595
$D_{c, max}$ [mm]	194	C_u [kN]	68
$r_{a, max}$ [mm]	2	n_{th} [min^{-1}]	2567
$r_{b, max}$ [mm]	1	n_g [min^{-1}]	4000