N3936E.M3

Cylindrical Roller Bearings (single row, with cage)

Details:

Main dimensions			
d [mm]	180	d_1 [mm]	≈ 204.6
D [mm]	250	$r_{1,2}$ [mm]	2
B [mm]	52	$r_{3,4}$ [mm]	1.1
Weight [kg]	≈ 8	s [mm]	2.7
E [mm]	235		

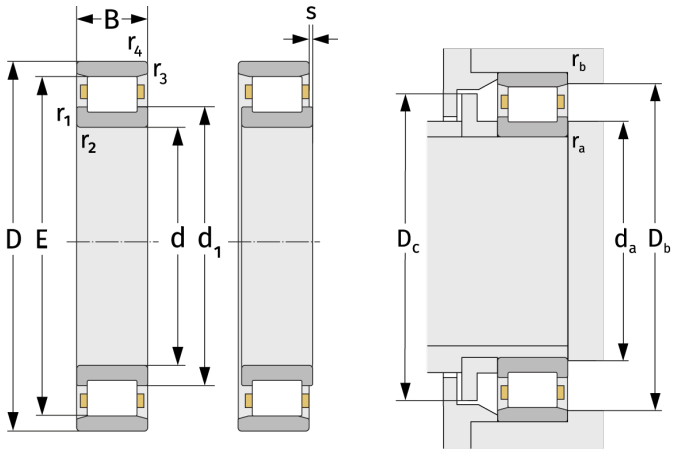

Mating dimensions		Calculation data	
$d_{a,\,min}$ [mm]	188.8	C [kN]	454
$D_{b,\,min}$ [mm]	238	C_0 [kN]	840
$D_{c,\,max}$ [mm]	232	C_u [kN]	91.5
$r_{a,\,max}$ [mm]	2	n_{th} [min^{-1}]	1992
$r_{b,\,max}$ [mm]	1	n_g [min^{-1}]	3300