NN3068S.M

Cylindrical Roller Bearings (double row, with cage)

Details:

Main dimensions			
d [mm]	340	d_1 [mm]	≈ 409
D [mm]	520	d_s [mm]	9.5
B [mm]	133	n_s [mm]	17.7
Weight [kg]	≈ 104	$r_{1,2}$ [mm]	5
E [mm]	473	s [mm]	8.7
E [mm]	473		

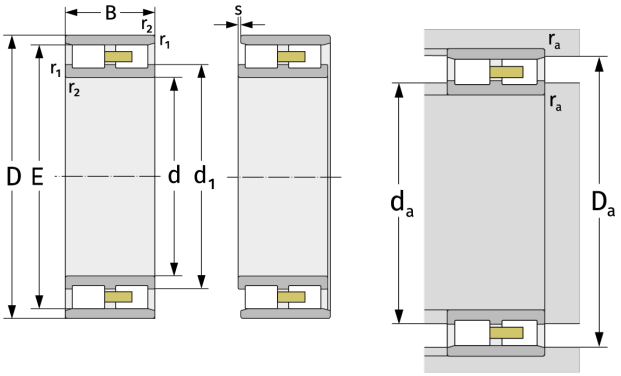

Mating dimensions		Calculation data	
$D_{a,\,min}$ [mm]	476	C [kN]	1690
$d_{a,\,min}$ [mm]	358	C_0 [kN]	3370
$D_{a,\,min}$ [mm]	476	C_u [kN]	302
$D_{a,\,max}$ [mm]	502	$n_{G,Fett}$ [min^{-1}]	1400
$r_{a,\,max}$ [mm]	4	$n_{G,Öl\text{-}Luft}$ [min^{-1}]	1700