NNCF4968V

Cylindrical Roller Bearings (full complement, double row)

Details:

Main dimensions			
d [mm]	340	d_s [mm]	4.8
D [mm]	460	n_s [mm]	9.5
B [mm]	118	$r_{1,2}$ [mm]	3
Weight [kg]	≈ 58.2	$r_{3,4}$ [mm]	3
d_1 [mm]	≈ 385.31	s [mm]	6
D_1 [mm]	≈ 418.91		

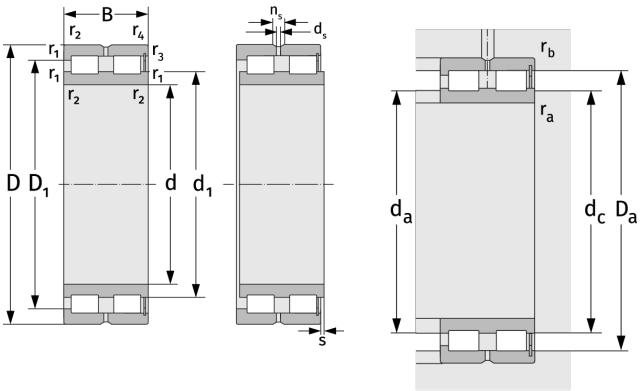

Mating dimensions		Calculation data	
$d_{a,\,min}$ [mm]	352.4	C [kN]	1710
$d_{c,\,empf}$ [mm]	381	C_0 [kN]	4340
$D_{a,\,max}$ [mm]	447.6	C_u [kN]	397
$r_{a,\,max}$ [mm]	2.5	n_{th} [min^{-1}]	371
$r_{b,\,max}$ [mm]	2.5	n_g [min^{-1}]	750