NNCF4996V

Cylindrical Roller Bearings (full complement, double row)

Details:

Main dimensions			
d [mm]	480	d_s [mm]	4.8
D [mm]	650	n_s [mm]	9.5
B [mm]	170	$r_{1,2}$ [mm]	5
Weight [kg]	≈ 168	$r_{3,4}$ [mm]	5
d_1 [mm]	≈ 547.2	s [mm]	8
D_1 [mm]	≈ 592.8		

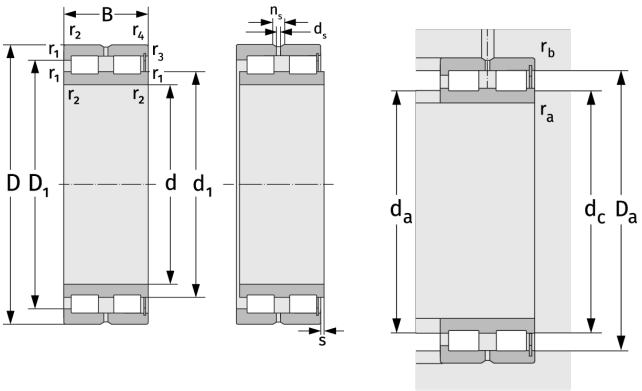

Mating dimensions		Calculation data	
$d_{a, min}$ [mm]	498	C [kN]	3190
$d_{c, empf}$ [mm]	542	C_0 [kN]	8750
$D_{a, max}$ [mm]	632	C_u [kN]	725
$r_{a, max}$ [mm]	4	n_{th} [min^{-1}]	227
$r_{b, max}$ [mm]	4	n_g [min^{-1}]	500