NNCF5012V

Cylindrical Roller Bearings (full complement, double row)

Details:

Main dimensions			
d [mm]	60	d_s [mm]	3.2
D [mm]	95	n_s [mm]	4.8
B [mm]	46	$r_{1,2}$ [mm]	1.1
Weight [kg]	≈ 1.22	$r_{3,4}$ [mm]	1
d_1 [mm]	≈ 70.74	s [mm]	1.5
D_1 [mm]	≈ 82.74		

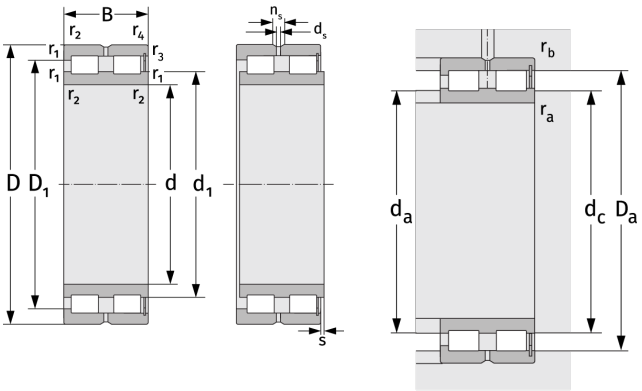

Mating dimensions		Calculation data	
$d_{a, min}$ [mm]	66	C [kN]	183
$d_{c, empf}$ [mm]	70	C_0 [kN]	294
$D_{a, max}$ [mm]	89	C_u [kN]	38.6
$r_{a, max}$ [mm]	1	n_{th} [min^{-1}]	2743
$r_{b, max}$ [mm]	1	n_g [min^{-1}]	4400