NNCF5026V

Cylindrical Roller Bearings (full complement, double row)

Details:

Main dimensions			
d [mm]	130	d_s [mm]	4.8
D [mm]	200	n_s [mm]	9.5
B [mm]	95	$r_{1,2}$ [mm]	2
Weight [kg]	≈ 10.4	$r_{3,4}$ [mm]	1.1
d_1 [mm]	≈ 148.61	s [mm]	5
D_1 [mm]	≈ 175.01		

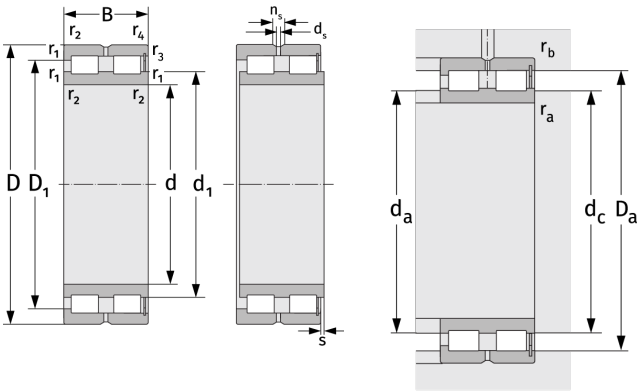

Mating dimensions		Calculation data	
$d_{a,\,min}$ [mm]	138.8	C [kN]	720
$d_{c,\,empf}$ [mm]	147	C_0 [kN]	1250
$D_{a,\,max}$ [mm]	191.2	C_u [kN]	148
$r_{a,\,max}$ [mm]	2	n_{th} [min^{-1}]	1288
$r_{b,\,max}$ [mm]	1	n_g [min^{-1}]	2000