NNCF5072V

Cylindrical Roller Bearings (full complement, double row)

Details:

Main dimensions			
d [mm]	360	d_s [mm]	6.3
D [mm]	540	n_s [mm]	12.2
B [mm]	243	$r_{1,2}$ [mm]	5
Weight [kg]	≈ 185	$r_{3,4}$ [mm]	5
d_1 [mm]	≈ 413.9	s [mm]	11
D_1 [mm]	≈ 481.1		

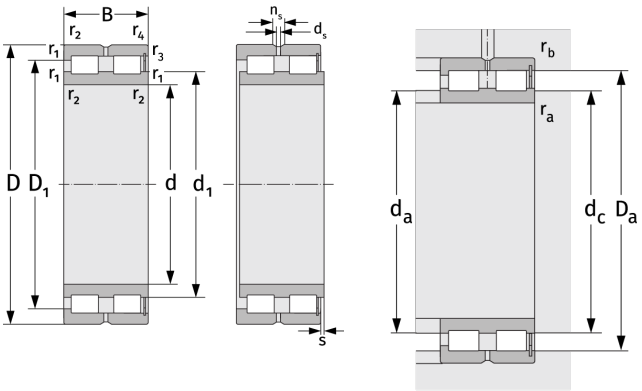

Mating dimensions		Calculation data	
$d_{a, min}$ [mm]	378	C [kN]	4270
$d_{c, empf}$ [mm]	410	C_0 [kN]	8850
$D_{a, max}$ [mm]	522	C_u [kN]	785
$r_{a, max}$ [mm]	4	n_{th} [min^{-1}]	312
$r_{b, max}$ [mm]	4	n_g [min^{-1}]	660