# NNU6032V

Cylindrical Roller Bearings (full complement, multi row)

## Details:

| Main dimensions | | | |
|---|---|---|---|
| d [mm] | 160 | $d_s$ [mm] | 3.2 |
| D [mm] | 240 | $n_s$ [mm] | 6.5 |
| B [mm] | 145 | $r_{1,2}$ [mm] | 2.1 |
| Weight [kg] | ≈ 25.3 | $r_{3,4}$ [mm] | 2.1 |
| $D_1$ [mm] | ≈ 209.6 | | |

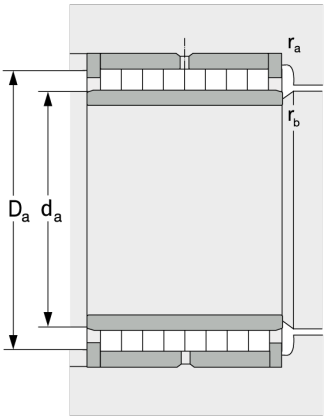


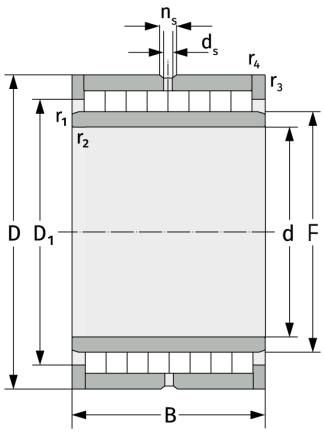


| Mating dimensions | | Calculation data | |
|---|---|---|---|
| $d_{a,\,min}$ [mm] | 170 | C [kN] | 1130 |
| $D_{a,\,max}$ [mm] | 230 | $C_0$ [kN] | 3000 |
| $r_{a,\,max}$ [mm] | 2.1 | $C_u$ [kN] | 335 |
| $r_{b,\,max}$ [mm] | 2.1 | | |