NNU6034V

Cylindrical Roller Bearings (full complement, multi row)

Details:

Main dimensions			
d [mm]	170	d_s [mm]	3.2
D [mm]	260	n_s [mm]	6.5
B [mm]	160	$r_{1,2}$ [mm]	2.1
Weight [kg]	≈ 34	$r_{3,4}$ [mm]	2.1
D_1 [mm]	≈ 224.05		

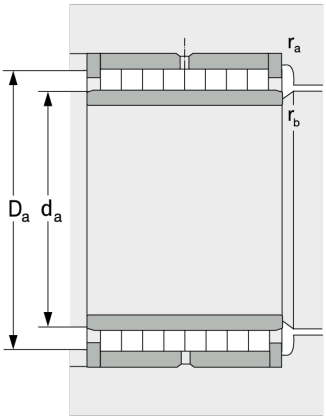

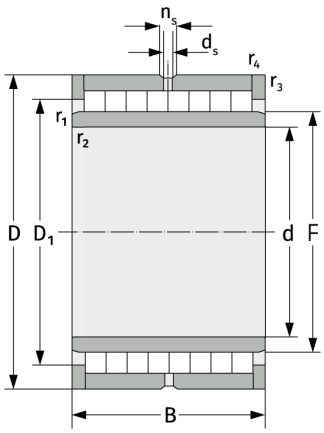

Mating dimensions	
$d_{a,\,min}$ [mm]	180
$D_{a,\,max}$ [mm]	250
$r_{a,\,max}$ [mm]	2.1
$r_{b,\,max}$ [mm]	2.1

Calculation data	
C [kN]	1360
C_0 [kN]	3570
C_u [kN]	392