32260

Tapered Roller Bearings (single row, metric)

Details:

Main dimensions			
d [mm]	300	B [mm]	140
D [mm]	540	d_1 [mm]	≈ 413.3
T [mm]	149	$r_{1,2}$ [mm]	6
Weight [kg]	≈ 140	$r_{3,4}$ [mm]	5
C [mm]	115	a [mm]	≈ 124.6

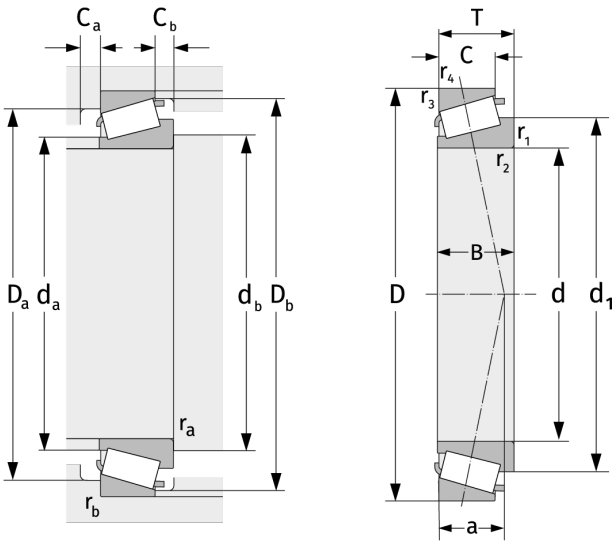

Mating dimensions		Calculation data	
$d_{a, max}$ [mm]	346	C [kN]	2730
$d_{b, min}$ [mm]	320	C_0 [kN]	4660
$D_{a, min}$ [mm]	453	C_u [kN]	385
$D_{a, max}$ [mm]	517	n_{th} [min^{-1}]	581
$D_{b, min}$ [mm]	510	n_g [min^{-1}]	1200
$C_{a, min}$ [mm]	16	e	0,43
$C_{b, min}$ [mm]	34	Y	1,39
$r_{a, max}$ [mm]	6	Y_0	0,77
$r_{b, max}$ [mm]	5		