32348

Tapered Roller Bearings (single row, metric)

Details:

Main dimensions			
d [mm]	240	B [mm]	155
D [mm]	500	d_1 [mm]	≈ 354.9
T [mm]	165	$r_{1,2}$ [mm]	6
Weight [kg]	≈ 147	$r_{3,4}$ [mm]	5
C [mm]	132	a [mm]	≈ 116

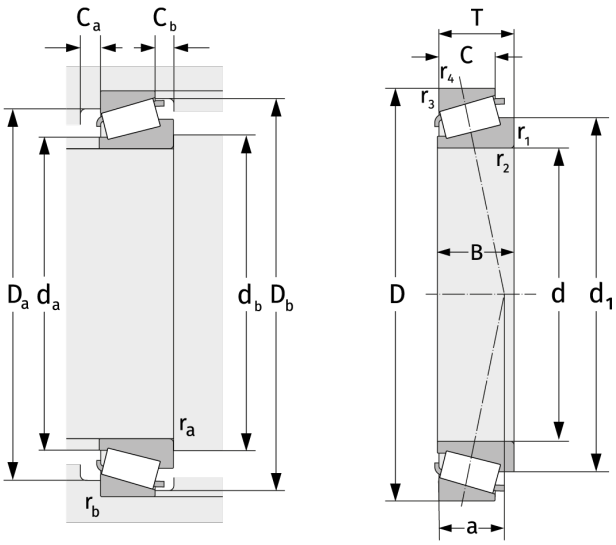

Mating dimensions		Calculation data	
$d_{a, max}$ [mm]	285	C [kN]	2810
$d_{b, min}$ [mm]	260	C_0 [kN]	4310
$D_{a, min}$ [mm]	411	C_u [kN]	367
$D_{a, max}$ [mm]	476	n_{th} [min^{-1}]	709
$D_{b, min}$ [mm]	465	n_g [min^{-1}]	1400
$C_{a, min}$ [mm]	16	e	0,35
$C_{b, min}$ [mm]	32	Y	1,74
$r_{a, max}$ [mm]	6	Y_0	0,96
$r_{b, max}$ [mm]	5		