32968

Tapered Roller Bearings (single row, metric)

Details:

Main dimensions			
d [mm]	340	B [mm]	76
D [mm]	460	d_1 [mm]	≈ 400.9
T [mm]	76	$r_{1,2}$ [mm]	4
Weight [kg]	≈ 34.8	$r_{3,4}$ [mm]	3
C [mm]	57	a [mm]	≈ 90.9

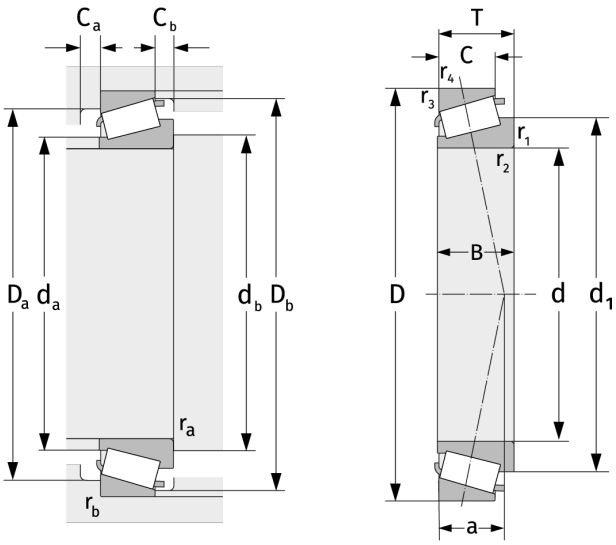

Mating dimensions		Calculation data	
$d_{a, max}$ [mm]	362	C [kN]	1100
$d_{b, min}$ [mm]	354	C_0 [kN]	2420
$D_{a, min}$ [mm]	421	C_u [kN]	202
$D_{a, max}$ [mm]	446	n_{th} [min^{-1}]	682
$D_{b, min}$ [mm]	446	n_g [min^{-1}]	1300
$C_{a, min}$ [mm]	12	e	0,44
$C_{b, min}$ [mm]	19	Y	1,37
$r_{a, max}$ [mm]	4	Y_0	0,75
$r_{b, max}$ [mm]	3		