32972

Tapered Roller Bearings (single row, metric)

Details:

Main dimensions			
d [mm]	360	B [mm]	76
D [mm]	480	d_1 [mm]	≈ 421
T [mm]	76	$r_{1,2}$ [mm]	4
Weight [kg]	≈ 36.5	$r_{3,4}$ [mm]	3
C [mm]	57	a [mm]	≈ 96.6

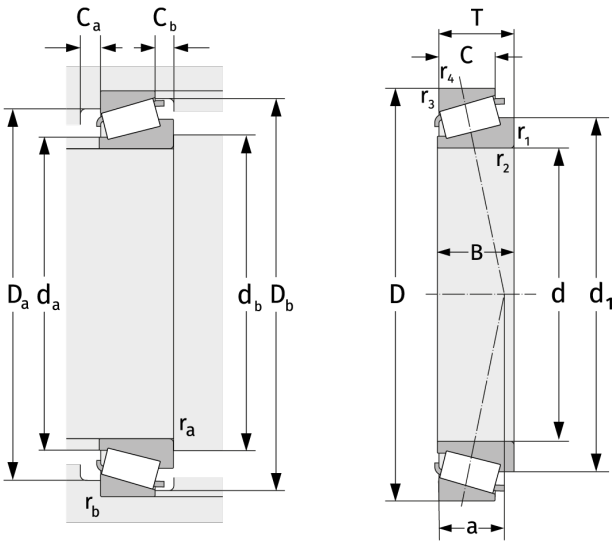

Mating dimensions		Calculation data	
$d_{a, max}$ [mm]	380	C [kN]	1130
$d_{b, min}$ [mm]	374	C_0 [kN]	2540
$D_{a, min}$ [mm]	439	C_u [kN]	209
$D_{a, max}$ [mm]	466	n_{th} [min^{-1}]	638
$D_{b, min}$ [mm]	466	n_g [min^{-1}]	1200
$C_{a, min}$ [mm]	14	e	0,46
$C_{b, min}$ [mm]	19	Y	1,31
$r_{a, max}$ [mm]	4	Y_0	0,72
$r_{b, max}$ [mm]	3		