HM30/1120

Grooved Nuts

Details:

Main dimensions			
Weight [kg]	≈ 190	B [mm]	100
G [mm]	Tr1120 x8	b [mm]	60
		h [mm]	25
d_1 [mm]	1205		
d_2 [mm]	1260		

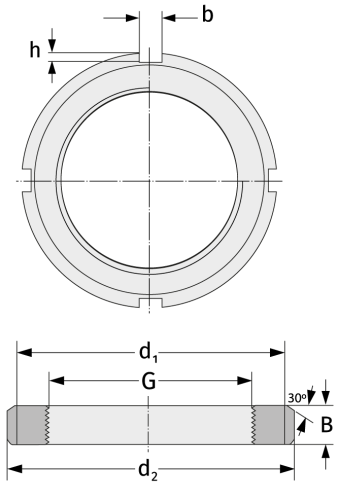

Mating dimensions	

Containing components	
Securing	MS30/1000