HM30/710

Grooved Nuts

Details:

Main dimensions			
Weight [kg]	≈ 90.7	B [mm]	90
G [mm]	Tr710x 7	b [mm]	50
		h [mm]	25
d_1 [mm]	780		
d_2 [mm]	830		

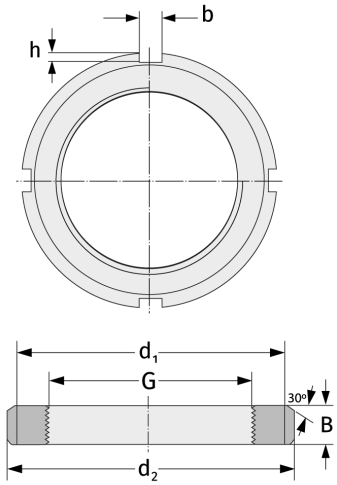

Mating dimensions		Containing components	
		Securing	MS30/710