HM30/850

Grooved Nuts

Details:

Main dimensions			
Weight [kg]	≈ 118	B [mm]	90
G [mm]	Tr850x 7	b [mm]	60
		h [mm]	25
d_1 [mm]	925		
d_2 [mm]	980		

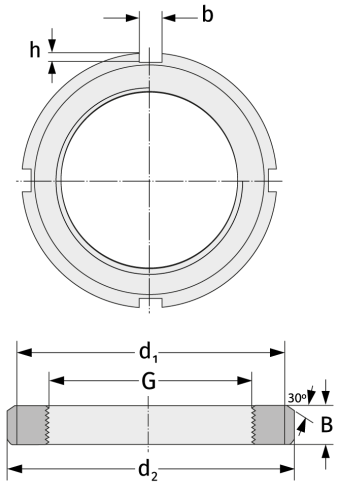

Mating dimensions	Containing components	
	Securing	MS30/850