# HM3088

Grooved Nuts

## Details:

| Main dimensions | | | |
|---|---|---|---|
| Weight [kg] | ≈ 26.2 | B [mm] | 60 |
| G [mm] | Tr440x 5 | b [mm] | 32 |
| | | h [mm] | 15 |
| $d_1$ [mm] | 490 | | |
| $d_2$ [mm] | 520 | | |

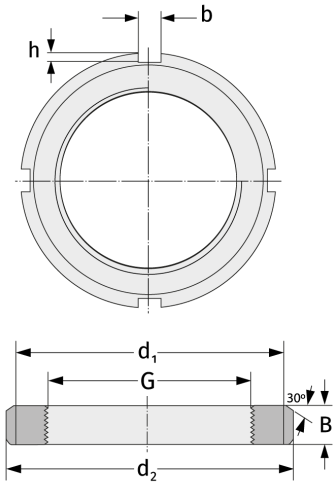


| Mating dimensions |
|---|

| Containing components | |
|---|---|
| Securing | MS3088 |