HM31/530

Grooved Nuts

Details:

Main dimensions			
Weight [kg]	≈ 74.3	B [mm]	80
G [mm]	Tr530x 6	b [mm]	40
		h [mm]	23
d_1 [mm]	610		
d_2 [mm]	670		

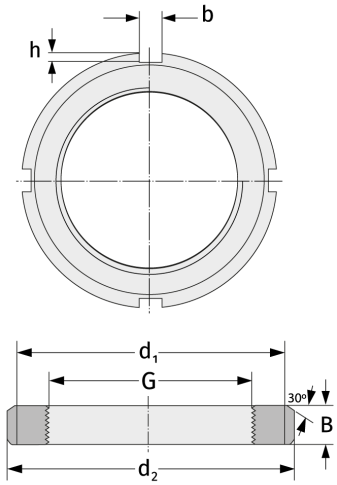

Mating dimensions		Containing components	
		Securing	MS31/530