HM31/800

Grooved Nuts

Details:

Main dimensions			
Weight [kg]	≈ 221	B [mm]	112
G [mm]	Tr800x 7	b [mm]	60
		h [mm]	34
d_1 [mm]	925		
d_2 [mm]	1000		

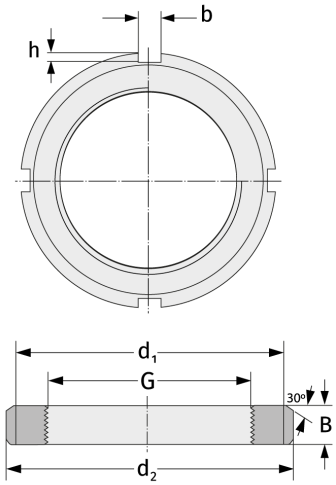

Mating dimensions		Containing components	
		Securing	MS31/750