HM3152

Grooved Nuts

Details:

Main dimensions			
Weight [kg]	≈ 7.99	B [mm]	36
G [mm]	Tr260x 4	b [mm]	24
		h [mm]	12
d_1 [mm]	300		
d_2 [mm]	330		

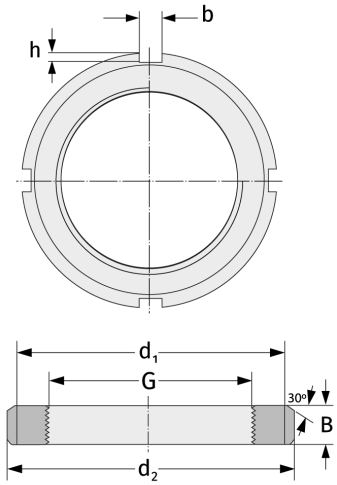

Mating dimensions	

Containing components	
Securing	MB52