KM22

Grooved Nuts

Details:

Main dimensions			
Weight [kg]	≈ 0.965	B [mm]	19
G [mm]	M110x 2	b [mm]	12
		h [mm]	5
d_1 [mm]	133		
d_2 [mm]	145		

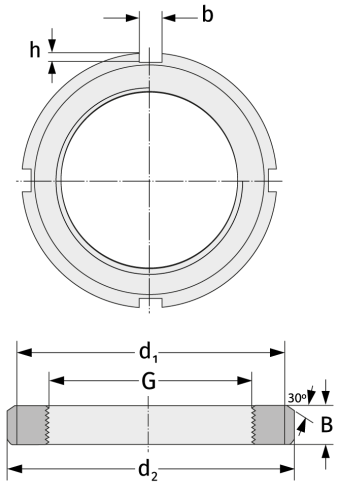

Mating dimensions	

Containing components	
Securing	MB22