# KM31

Grooved Nuts

## Details:

| Main dimensions | | | |
|---|---|---|---|
| Weight [kg] | ≈ 2.3 | B [mm] | 25 |
| G [mm] | M155x 3 | b [mm] | 16 |
| | | h [mm] | 7 |
| $d_1$ [mm] | 182 | | |
| $d_2$ [mm] | 200 | | |

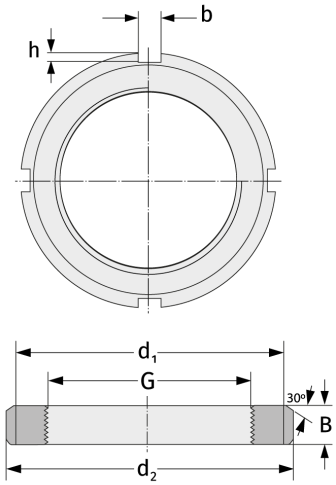


| Mating dimensions |
|---|

| Containing components | |
|---|---|
| Securing | MB31 |