KM40

Grooved Nuts

Details:

Main dimensions			
Weight [kg]	≈ 3.69	B [mm]	29
G [mm]	M200x 3	b [mm]	18
		h [mm]	8
d_1 [mm]	226		
d_2 [mm]	250		

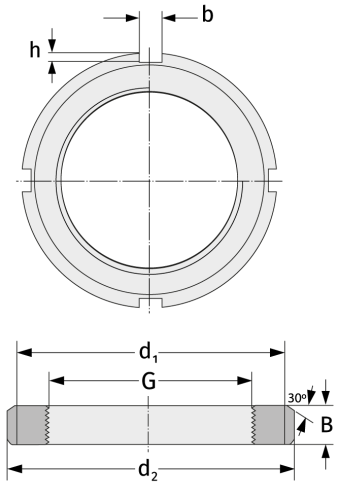

Mating dimensions

Containing components	
Securing	MB40