MB27

Safety Plates

Details:

Main dimensions			
Weight [kg]	≈ 14.4	s [mm]	2
d_1 [mm]	135	b_1 [mm]	14
d_2 [mm]	185	b_2 [mm]	14
d_3 [mm]	160	M [mm]	130

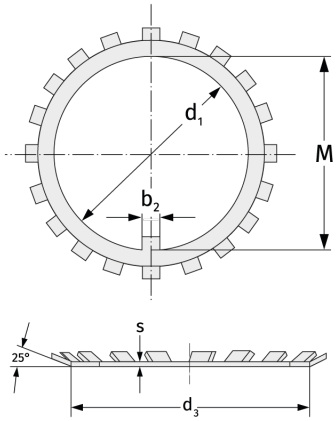

Mating dimensions	Calculation data