MB29

Safety Plates

Details:

Main dimensions			
Weight [kg]	≈ 16.8	s [mm]	2
d_1 [mm]	145	b_1 [mm]	14
d_2 [mm]	202	b_2 [mm]	16
d_3 [mm]	171	M [mm]	140

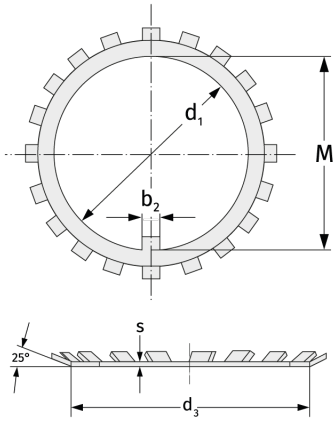

Mating dimensions	Calculation data