MB33

Safety Plates

Details:

Main dimensions			
Weight [kg]	≈ 24.1	s [mm]	2.5
d_1 [mm]	165	b_1 [mm]	16
d_2 [mm]	222	b_2 [mm]	18
d_3 [mm]	193	M [mm]	157.5

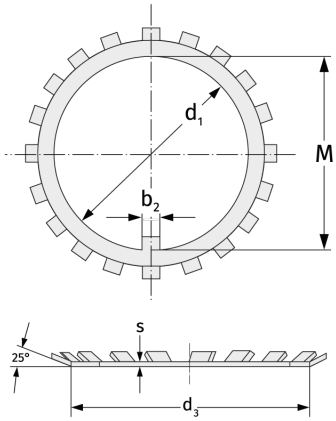

Mating dimensions	Calculation data