MB6

Safety Plates

Details:

Main dimensions			
Weight [kg]	≈ 0.78	s [mm]	1.25
d_1 [mm]	30	b_1 [mm]	5
d_2 [mm]	49	b_2 [mm]	5
d_3 [mm]	38	M [mm]	27.5

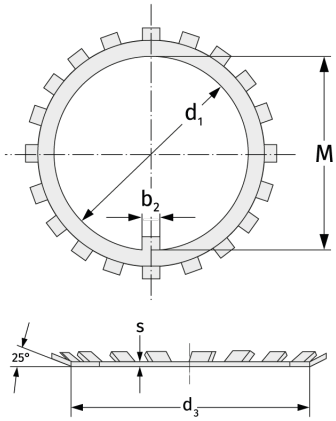

Mating dimensions	Calculation data