N10/600M3

Cylindrical Roller Bearings (single row, with cage)

Details:

Main dimensions			
d [mm]	600	d_1 [mm]	≈ 694.2
D [mm]	870	$r_{1,2}$ [mm]	6
B [mm]	118	$r_{3,4}$ [mm]	6
Weight [kg]	≈ 234	s [mm]	13.5
E [mm]	803		

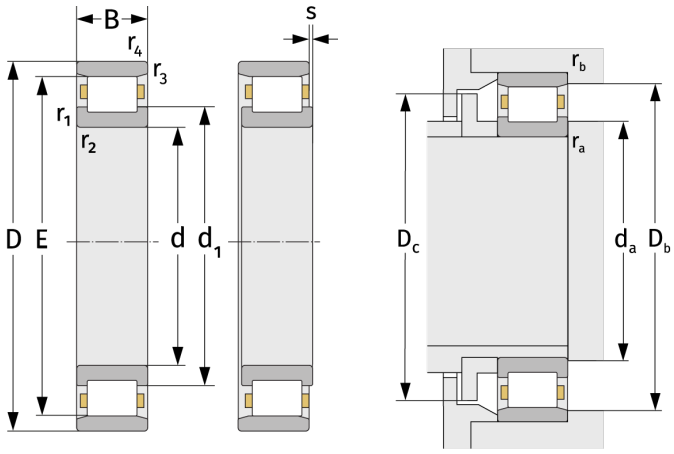

Mating dimensions		Calculation data	
$d_{a,\,min}$ [mm]	623	C [kN]	2940
$D_{b,\,min}$ [mm]	809	C_0 [kN]	5600
$D_{c,\,max}$ [mm]	797	C_u [kN]	431
$r_{a,\,max}$ [mm]	5	n_{th} [min^{-1}]	538
$r_{b,\,max}$ [mm]	5	n_g [min^{-1}]	800