N1028M3

Cylindrical Roller Bearings (single row, with cage)

Details:

Main dimensions			
d [mm]	140	d_1 [mm]	≈ 164.8
D [mm]	210	$r_{1,2}$ [mm]	2
B [mm]	33	$r_{3,4}$ [mm]	1.1
Weight [kg]	≈ 3	s [mm]	5
E [mm]	192		

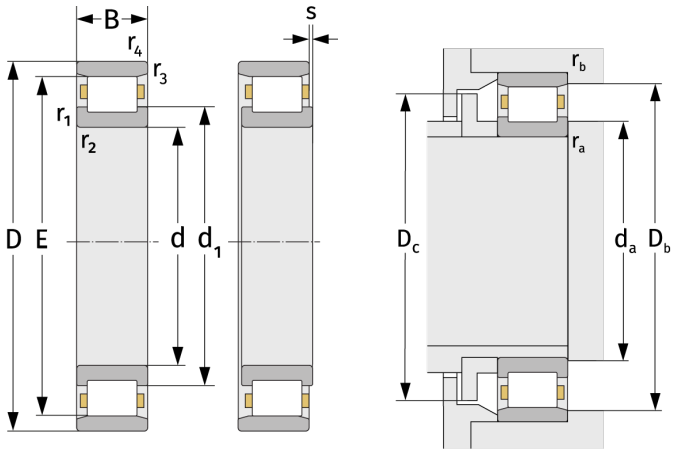

Mating dimensions		Calculation data	
$d_{a, min}$ [mm]	148.8	C [kN]	195
$D_{b, min}$ [mm]	194	C_0 [kN]	285
$D_{c, max}$ [mm]	189	C_u [kN]	33
$r_{a, max}$ [mm]	2	n_{th} [min^{-1}]	3219
$r_{b, max}$ [mm]	1	n_g [min^{-1}]	4100