N1814M3

Cylindrical Roller Bearings (single row, with cage)

Details:

Main dimensions			
d [mm]	70	d_1 [mm]	≈ 77
D [mm]	90	$r_{1,2}$ [mm]	0.6
B [mm]	10	$r_{3,4}$ [mm]	0.3
E [mm]	85	s [mm]	1.5

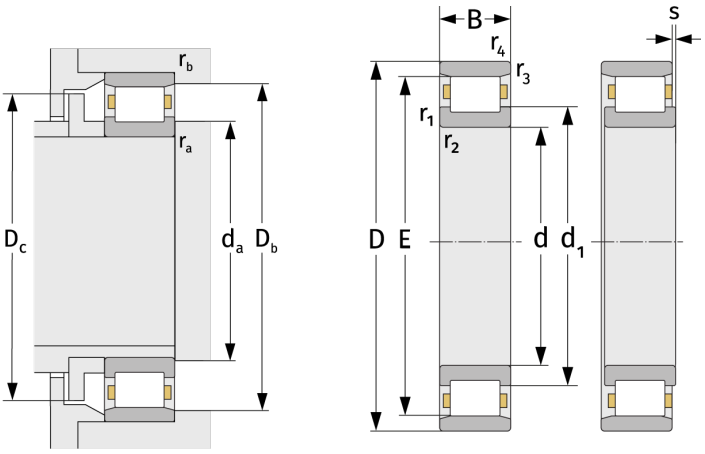

Mating dimensions		Calculation data	
$d_{a, min}$ [mm]	73.2	C [kN]	21.2
$D_{b, min}$ [mm]	86	C_0 [kN]	30.4
$D_{c, max}$ [mm]	83	C_u [kN]	3.98
$r_{a, max}$ [mm]	0.6	n_{th} [min^{-1}]	4502
$r_{b, max}$ [mm]	0.3	n_g [min^{-1}]	9200