N19/1000E.M3

Cylindrical Roller Bearings (single row, with cage)

Details:

Main dimensions			
d [mm]	1000	d_1 [mm]	≈ 1113
D [mm]	1320	$r_{1,2}$ [mm]	7.5
B [mm]	140	$r_{3,4}$ [mm]	7.5
Weight [kg]	≈ 507	s [mm]	10.5
E [mm]	1249		

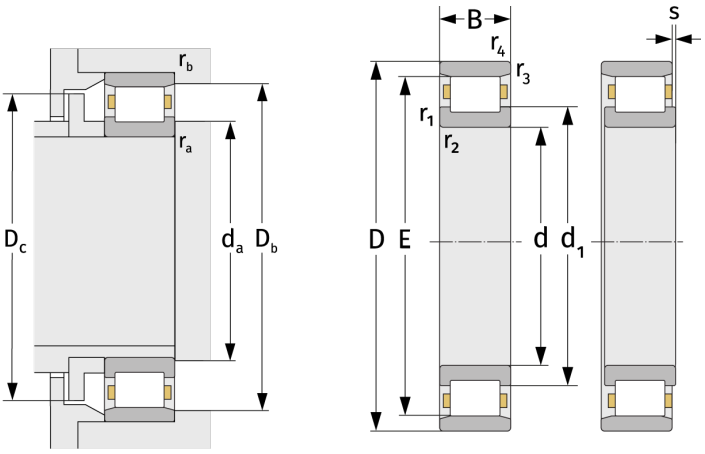

Mating dimensions		Calculation data	
$d_{a, min}$ [mm]	1028	C [kN]	4720
$D_{b, min}$ [mm]	1254	C_0 [kN]	10300
$D_{c, max}$ [mm]	1244	C_u [kN]	693
$r_{a, max}$ [mm]	6	n_{th} [min^{-1}]	293
$r_{b, max}$ [mm]	6	n_g [min^{-1}]	420