N1924E.M3

Cylindrical Roller Bearings (single row, with cage)

Details:

Main dimensions			
d [mm]	120	d_1 [mm]	≈ 136.3
D [mm]	165	$r_{1,2}$ [mm]	1.1
B [mm]	22	$r_{3,4}$ [mm]	1
Weight [kg]	≈ 1	s [mm]	1.7
E [mm]	155.5		

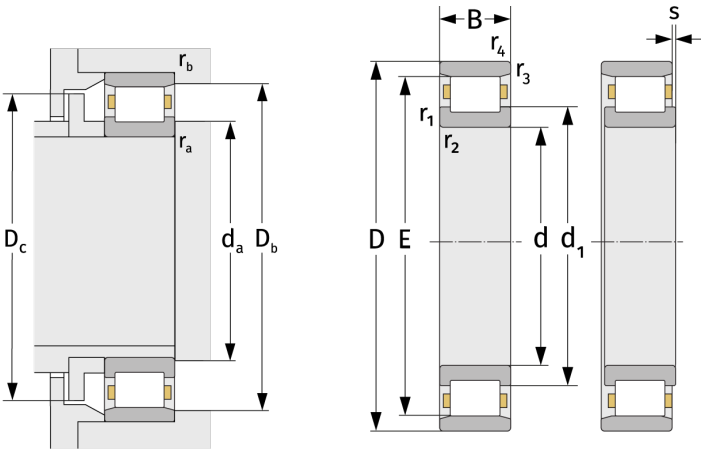

Mating dimensions		Calculation data	
$d_{a, min}$ [mm]	126	C [kN]	129
$D_{b, min}$ [mm]	158	C_0 [kN]	202
$D_{c, max}$ [mm]	153	C_u [kN]	24.7
$r_{a, max}$ [mm]	1	n_{th} [min^{-1}]	3188
$r_{b, max}$ [mm]	1	n_g [min^{-1}]	5100