N2013E.M3

Cylindrical Roller Bearings (single row, with cage)

Details:

Main dimensions			
d [mm]	65	d_1 [mm]	≈ 77.6
D [mm]	100	$r_{1,2}$ [mm]	1.1
B [mm]	22	$r_{3,4}$ [mm]	1
E [mm]	92	s [mm]	1.5

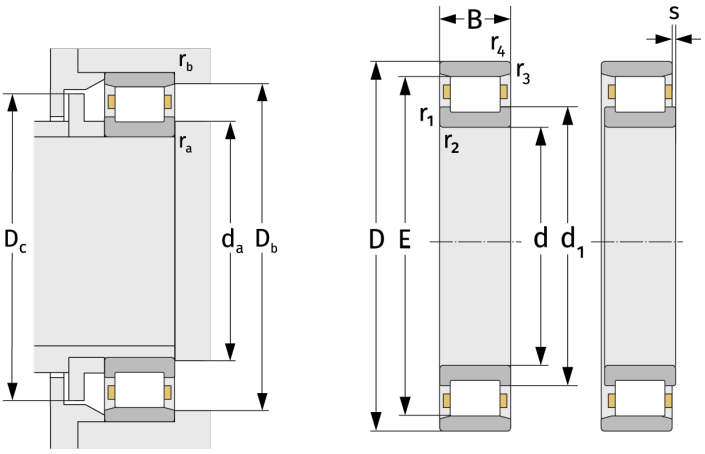

Mating dimensions		Calculation data	
$d_{a, min}$ [mm]	71	C [kN]	76.9
$D_{b, min}$ [mm]	93	C_0 [kN]	106
$D_{c, max}$ [mm]	91	C_u [kN]	13.9
$r_{a, max}$ [mm]	1	n_{th} [min^{-1}]	5535
$r_{b, max}$ [mm]	1	n_g [min^{-1}]	8900