N213E.M3

Cylindrical Roller Bearings (single row, with cage)

Details:

Main dimensions			
d [mm]	65	d_1 [mm]	≈ 84.5
D [mm]	120	$r_{1,2}$ [mm]	1.5
B [mm]	23	$r_{3,4}$ [mm]	1.5
Weight [kg]	≈ 1	s [mm]	2.1
E [mm]	108.5		

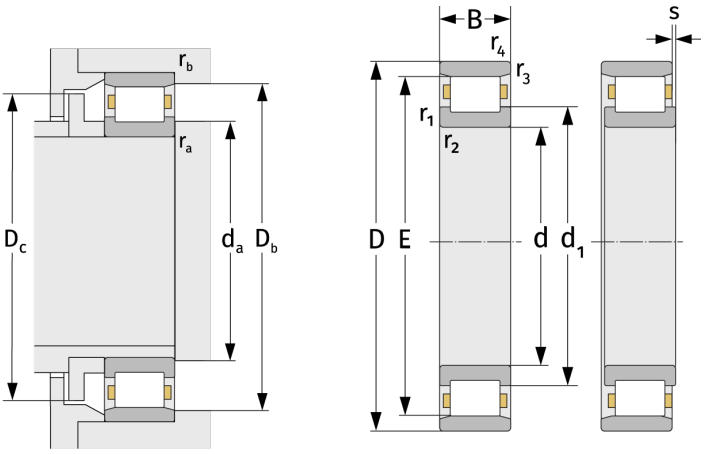

Mating dimensions		Calculation data	
$d_{a, min}$ [mm]	74	C [kN]	111
$D_{b, min}$ [mm]	110	C_0 [kN]	123
$D_{c, max}$ [mm]	106	C_u [kN]	16.1
$r_{a, max}$ [mm]	1.5	n_{th} [min^{-1}]	4966
$r_{b, max}$ [mm]	1.5	n_g [min^{-1}]	7800